THE CAGE IS THE KEY

POSI LOCK PULLER, INC.

Safety. Speed. Strength. Safety. Speed. Strength. Safety. Speed. Strength. Safety.

203 PARTS BREAKDOWN

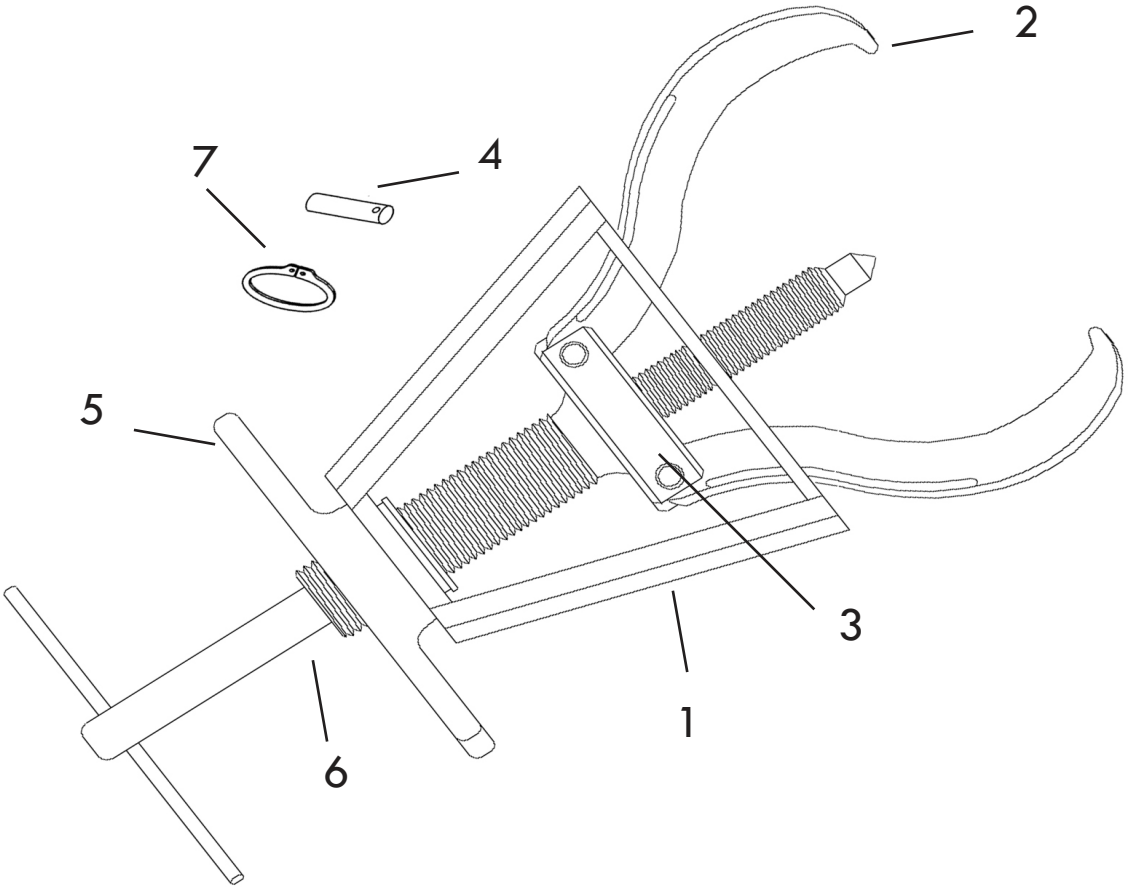

All Posi Lock Pullers are parts replaceable.
See part numbers below.

Description	Part #
1. Cage® - 2 Jaw	20353
2. Jaw	10354
3. Jaw Head Assembly - 2 Jaw	20355
4. Pin	10356
5. T-Handle	10357
6. Center Bolt (dia. 3/8")	10358
7. Snap Ring	10359